PEIKKO

WHITE PAPER

Circular economy

BOLTED CONNECTIONS FOR PRECAST STRUCTURES

ENABLING CIRCULARITY WITHOUT COMPROMISING PERFORMANCE

AUTHOR:
Jaakko Yrjölä
M.Sc.
Senior Structural Engineer
Peikko Group Corporation

Precast construction offers numerous benefits to different stakeholders of the value chain in the construction industry. Precast elements are usually manufactured under controlled factory conditions, thus allowing the production of high quality and precision.

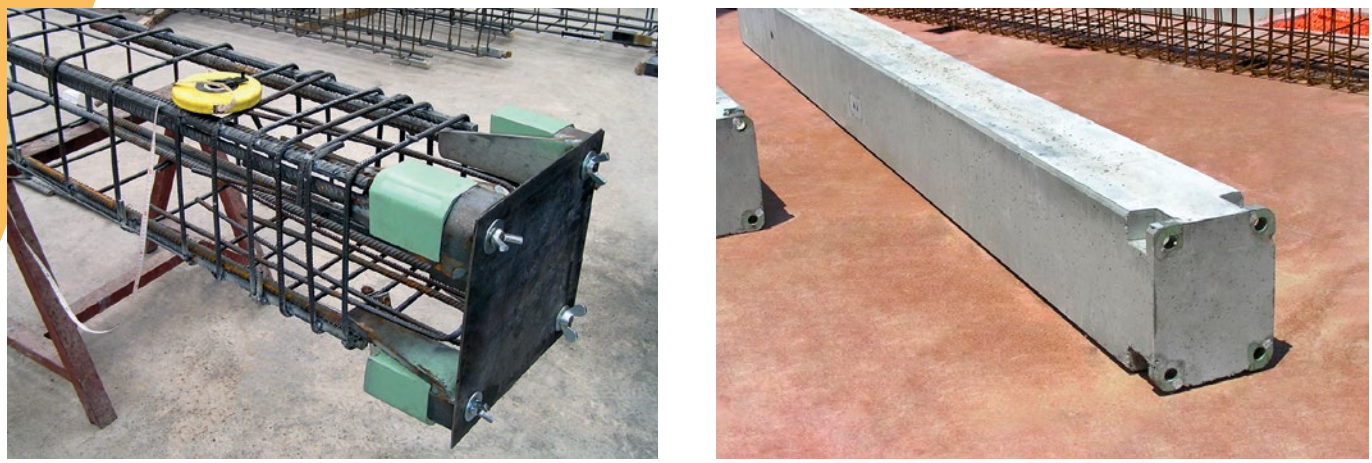

FIGURE 1 HPKM® COLUMN SHOES BEFORE AND AFTER CASTING OF THE PRECAST COLUMN

PEIKKO BOLTED CONNECTIONS provide fast and safe assemblies of precast concrete elements further improving the competitiveness of the precast concrete industry (see **figure 1**).

HPKM® Column Shoes, combined with HPM® Anchor Bolts or COPRA® Anchoring Couplers, are used to quickly create moment resisting column connections (see **figure 2**). Column shoes are cast into precast concrete columns, whereas anchor bolts are cast into foundations or other supporting structures. At construction sites, the columns are erected on the anchor bolts and adjusted to the desired position by tightening nuts onto the anchor bolts. After installation, the joint between the column and the foundation is grouted. At the final stage, the grouted joint acts as a traditional reinforced concrete section.

FIGURE 2 HPM® ANCHOR BOLTS AND COPRA® ANCHORING COUPLERS

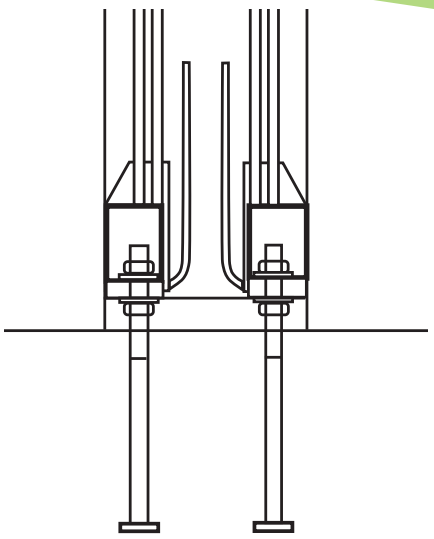

FIGURE 3 BOLTED PRECAST COLUMN CONNECTION WITH HIGHLIGHTED RECESS BOXES

The column shoes do not require any temporary bracing during the erection stage. Typically, four column shoes are enough to create a moment resisting connection (see **figure 3**).

CHASING THE CIRCULARITY of construction products and buildings is Peikko's passion and ambition.

While concrete is the most widely used construction material, it is also one of the biggest consumers of raw materials on our planet: over 10 billion tons of sand and natural rocks, as well as 1 billion tons of water are used annually for concrete production around the world [1]. Additionally, the concrete industry has a significant influence on CO_2 emissions, and it consumes a great deal of energy every year. Producing one cubic meter of concrete using Portland cement and clinker results in emitting approximately 0.2 t of CO_2. About one ton of CO_2 is generated for each ton of clinker [2].

In addition to consumption of raw materials and energy, as well as high CO_2 emissions, over 11 billion tons of waste is generated due to demolition and construction work [1]. About 50% of this quantity comes from concrete waste [3]. Considerable amount of concrete structures around the world end their service life due to demolition, while they still possess some residual value and could serve much longer. Very few attempts have been made to reuse concrete structures of buildings ending their service life, even though studies have shown that by doing this, significant environmental benefits and energy savings could be achieved [2].

Lack of adaptability of connections between concrete structures is known as one of the biggest reasons that hinder reuse of precast concrete elements. In order to improve the reusability in new concrete buildings, connections should be designed to allow easy and cost efficient dismount [4]. The ecology of concrete structures could be significantly improved by applying the Design for Disassembly (DfD) in the design of connections. These facts have been acknowledged by the European Commission as some of the cornerstones of the Circular Economy Action Plan [5] that defines a roadmap for achieving the carbon neutrality of the construction industry within 2050. Among other issues, the Action plan implies that new material recovery targets will be set in EU legislation for construction and demolition waste in foreseeable future.

There are many types of concrete buildings that could already benefit from demountable connections, which would make it possible to dismantle and to reuse the structures. Secondary class buildings, like industry frames, warehouses, car parks, etc. might only be needed temporarily at certain locations. After the required service life, such buildings could be relocated to serve again wherever needed. In addition to relocation, removable structures could be also replaced if they are damaged or deteriorated.

Bolted connections have great potential to be the basis for the DfD and to increase the reusability of precast concrete structures [6]. In principle, untightening of a bolted connection should be as easy as tightening it.

ARE PEIKKO BOLTED CONNECTIONS DEMOUNTABLE?

A series of experimental demonstrations have been organized by Peikko in order to answer the above question. First, precast columns were assembled and disassembled from a foundation on site. Thereafter, identical columns were supplied to a testing laboratory in order to investigate how the dismount ability effects their load bearing behavior.

DISASSEMBLY TESTS

The disassembly tests were arranged by first casting three foundation blocks to the ground, 0.5 m x 0.5 m x 0.5 m in size. While one of the blocks was equipped with HPM® 16 L Anchor Bolts, the other two blocks were equipped with COPRA® 16 H Anchoring Couplers and M16 Threaded Bars (see **figure 4**).

In the second phase, precast columns (0.35 m x 0.35 m x 1.5 m), equipped with corresponding HPKM® 16 Column Shoes, were installed on the foundations (see **figure 5**) and the gaps between parts were eventually grouted with Fescon's JB 600/3, which is commonly used cement based mortar in Finland, generating the compressive strength up to 60 MPa.

A couple of weeks later, the dismount was executed by opening the upper nuts of anchor bolts / threaded bars and lifting the precast columns up using a mobile crane. After the dismount of the columns, the hardened grout blocks were removed quickly and easily. The adhesive bond between the grout and the structures was easily broken, and the grout got separated cleanly from the precast columns and the foundation blocks (see **figure 6** and **7**).

FIGURE 4 FOUNDATION WITH HPM® ANCHOR BOLTS FURTHER BACK AND FOUNDATION WITH COPRA® ANCHORING COUPLERS IN THE FOREFRONT

FIGURE 5 PRECAST COLUMN INSTALLED ON A FOUNDATION WITH TIMBER FORMWORK

FIGURE 6 REMOVED GROUT PAD AND EXPOSED FOUNDATION WITH COPRA® ANCHORING COUPLERS

FIGURE 7 SURFACE OF THE GROUT PAD WITH REMOVED COLUMN. CONNECTION WITH THE USE OF HPM® ANCHOR BOLTS

When removing the grout from the connections including COPRA® Anchoring Couplers, it was found out that the threaded bars could actually be screwed out from concrete and there was no need for any saw cutting (see **figure 8**). Also, HPM® Anchor Bolts were cleared relatively easily from grout, but removal of the grout had to be done by saw cutting, which demanded more time and effort (see **figure 9**).

In the last phase, the dismantled precast columns were reinstalled on the cleaned foundations and reformed connections were grouted again. This proved the reusability of both precast columns and foundation blocks (see **figure 10**).

FIGURE 8 M16 THREADED BARS OF COPRA® ANCHORING COUPLERS ARE BEING UNSCREWED

FIGURE 9 GROUT PAD REMOVED BY SAW CUTTING FROM THE FOUNDATION WITH HPM® ANCHOR BOLTS

FIGURE 10 REASSEMBLED PRECAST COLUMNS

LOAD BEARING TESTS

In the load bearing shear tests, the columns were bolted to massive foundation parts (0.45 m x 0.7 m x 1.4 m). Like in disassembly tests, the joint gaps between the foundations and the columns were grouted with JB 600/3 cement based mortar, and the recess boxes of column shoes were left exposed (see **figure 3**). Two foundation blocks were otherwise identical, but while one of them used HPM® 16 L Anchor Bolts, the other was equipped with COPRA® 16 H Anchoring Couplers (see **figure 11**).

In the setup, the foundation blocks laid on strong floor and the other ends of the precast columns were supported on a hinged bearing. The applied force acted in vertical direction on the edge column end and was introduced by a hydraulic jack. Principle drawing about the test setups is presented in **figure 12**.

A steel spreader beam was used between the jack and the column end. Load was first elevated a few times to about 30 kN, and then degraded back to zero, before loading to the failure. These service load cycles caused a setting of the structure due to initial deformation. Photo from one of the test setups is presented in **figure 13**.

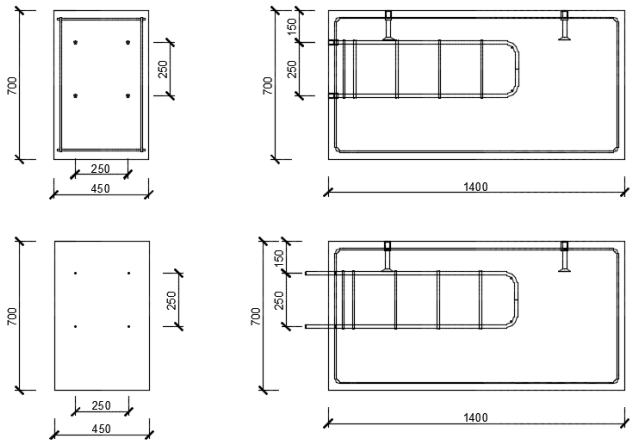

FIGURE 11 SCHEMATIC PRESENTATION OF THE FOUNDATION BLOCKS

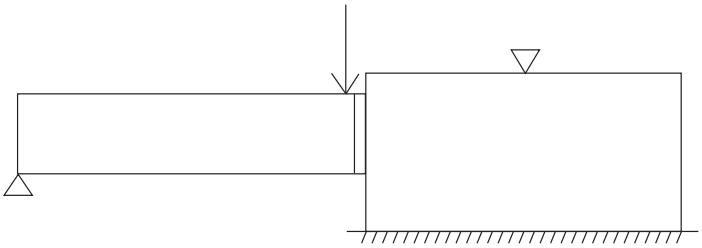

FIGURE 12 SCHEMATIC PRESENTATION OF TEST SETUPS

FIGURE 13 PHOTO FROM THE TEST SETUP, BEFORE LOADING THE CONNECTION

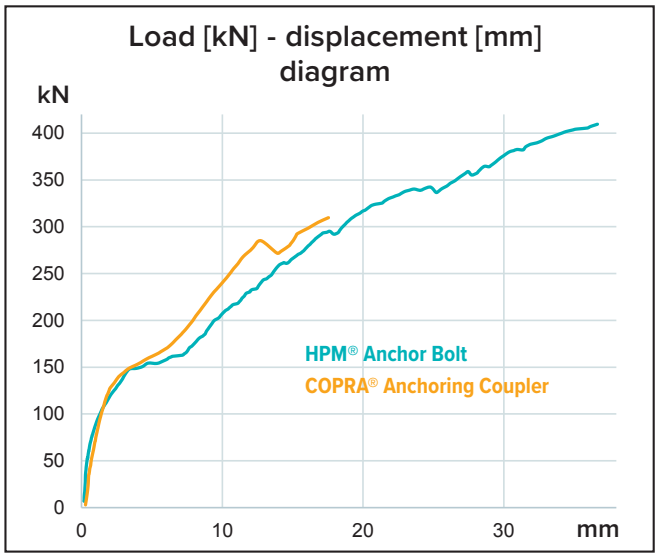

FIGURE 14 FORCE - DISPLACEMENT RELATIONSHIP

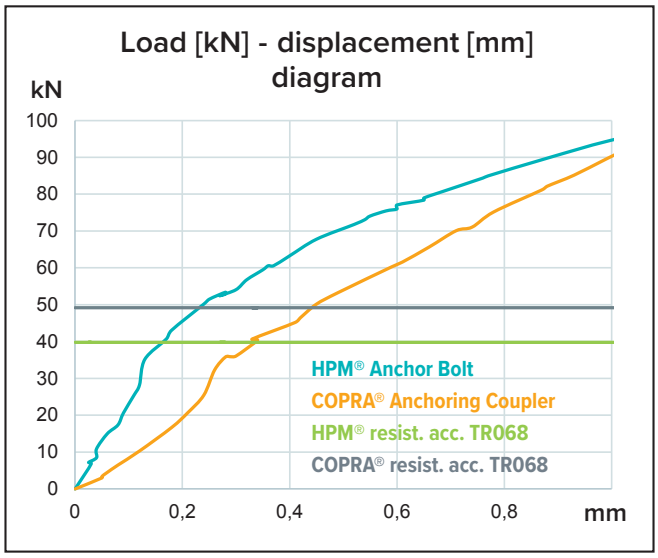

FIGURE 15 FORCE – DISPLACEMENT RELATIONSHIP, RANGE 0–1.0 MM

In addition to failure load, vertical displacements of the column ends were measured during the loading as shown in **figure 14**.

The behavior of both bolted connections followed a similar pattern. At first, a rigid behavior (shear deformation less than 1 mm) of the assembly was observed up to a load level corresponding to roughly 100–150 kN. Thereafter, deformations started to increase until the failure of the bolts that was associated with large shear deformations (more than 15 mm).

In practice, the shear design of bolted connections is based on elastic theory and only small deformations of the joint can be accepted even at Ultimate Limit State. **Figure 15** compares the load displacement curves of the both tested specimen under small displacements (0–1 mm). No significant difference between the performacne of a traditional connection and the connection with COPRA® Anchoring Couplers can be observed. The load level that can be sustained by the connections at a deformation of 1 mm is significantly higher than the theoretical design values of shear resistance (see **figure 15**), determined in accordance with Technical Report 068 of European Organization for Technical Assessment [7].

CONCLUSIONS

The experiments presented here allowed us to demonstrate that bolted connections using both HPM® Anchor Bolts and COPRA® Anchoring Couplers are to some degree demountable. Still, the connection made using COPRA® Anchoring Couplers and Threaded Bars is reused more easily than the connection made using HPM® Anchor Bolts (possible damage of the thread during disassembly). No significant difference in the load bearing performance of both tested connections has been observed. The design following the principles of EOTA TR068 is conservative for both tested assemblies. Both connections presented ductile and robust behavior; the ultimate load associated with large deformations.

The output from the tests serves as an example of how Peikko bolted connections could be used to unlock the potential of precast concrete and to make the construction industry more sustainable and circular. Even if bolted connections make it possible to reuse of the precast columns and foundations, it should always be validated by the supplier or a third party.

BIBLIOGRAPHY

[1] Mehta, Kumar P. 2002. “Greening of the Concrete Industry for Sustainable Development.” Concrete International 24(7):23-28

[2] Salama, Wasim. 2017. “Design of concrete buildings for disassembly: An explorative view.” International Journal of Sustainable Built Environment 6: 617-635. Accepted March 31, 2017.

[3] Tam, V.W.Y. 2008. “Economic comparison of concrete recycling: A case study approach” Resources Conservation and Recycling 52(5):821-828. doi:10.1016/j.resconrec.2007.12.001

[4] Lahdensivu, Jukka. Huuhka, Satu. Annila, Petri. Pikkuvirta, Jussa. Köliö, Arto. Pakkala, Toni. 2015. “Betonielementtien uudelleenkäyttömahdollisuudet”. Tampere University of Technology. Department of Civil Engineering. Structural Engineering. Research report 162

[5] Circular Economy Action Plan. For a cleaner and more competitive Europe. 2020. European Commission

[6] ISO International Standard ISO 20887: Sustainability in buildings and civil engineering works – Design for disassembly and adaptability – Principles, requirements and guidance. 2020. ISO 20887:2020(E)

[7] EOTA TR 068. 2019. “Design of structural connections with column shoes”.

A faster, safer, and more efficient way to design and build

Peikko is a leading global supplier of slim floor structures, wind energy applications and connection technology for precast and cast-in-situ. Peikko's innovative solutions offer a faster, safer, and more efficient way to design and build.

www.peikko.com

peikko®